Model: NAVONA CREMA ITALIA CLASSICO
Codes: 100002186 - L170501002
Group: G-179
Format: 42X14



ADDITIONAL NOTES

Incluye un vaciador fijo con tapa de piedra del mismo acabado que el propio lavabo, compatible con USA. Además, es compatible con el sifón de USA Project N. de NOKEN

GENERAL FEATURES

Location	Vessel	

FEATURES

- Gloss-free
- Protection that reduces the appearance of the most common domestic bacteria.
- Washbasin installed on a countertop or cabinet.
- There are slight color changes between pieces.

PACKING

Base unit	PIECES	
Gross weight	37 KG/PIECES	
Net weight	33 KG/PIECES	
Pallets	6 PIECES/PAL	
Sale unit	PIECES	

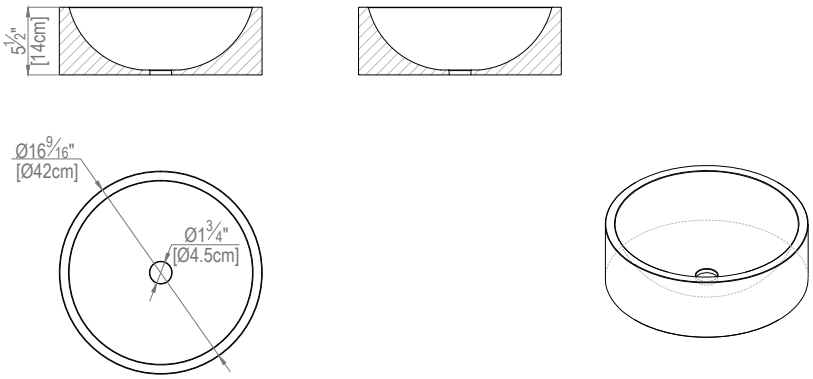
5 1/2"
[14cm]
Ø16 9/16"
[Ø42cm]
Ø1 3/4"
[Ø4.5cm]