Malta

Ref. 373516..0



Balance and symmetry go hand in hand in this collection, to create a solid design piece. The result is a proposal where simplicity combined with durability and strength blend perfectly in any bathroom space.

Vitreous china shower tray with anti-slip base

Depth: Slim (between 45 and 65mm)
Installation type: Built-in
Material: Vitreous china
Shape: Rectangular

Colours and finishes

How to obtain the reference number
Replace the ".." with the desired finish code from the list below

00 White

Dimensions

Length: 1200 mm.
Width: 800 mm.
Height: 65 mm.

Compatible with

506401900 90mm ø waste for shower tray

Technical drawings

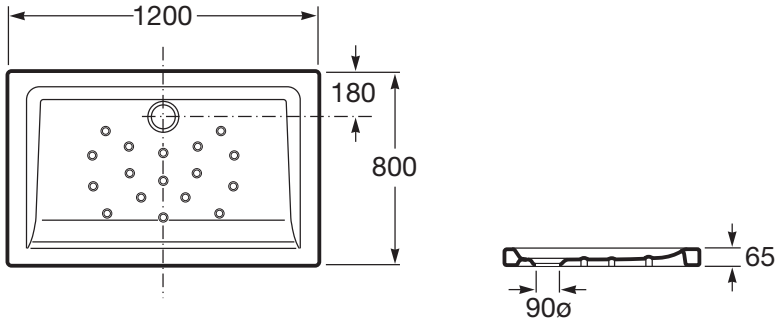

© Copyright 2018, Roca Sanitario, S.A. - All rights reserved